THIS DRAWING IS UNPUBLISHED. RELEASED FOR PUBLICATION - ,- .
© COPYRIGHT - By - ALL RIGHTS RESERVED.

LOC	DIST
GP	00

REVISIONS

P	LTR	DESCRIPTION	DATE	DWN	APVD
	L2	REVISED PER ECO-11-004835	11MAR11	RK	HMR

1. BRASS, .023 THICK PER MIL-C-50 OR ASTM B16.
2. 2.54µm [.000100] MIN TIN OR TIN LEAD PER MIL-T-10727 OVER 2.54µm [.000100] MIN COPPER PER MIL-C-14550A.
3. FERRULE SELECTION PROCEDURE:
   A. SELECT THE DESIRED CABLE CLAMP FROM ANY OF THE FOLLOWING DRAWINGS: 5745171, 5745172, 5745173, 5745174, 5745175, 5745854, 5747099, 5745833, 5747100, 5747098, 5745919, 5745652, 5745653
   B. VERIFY THAT THE CHOSEN CABLE CLAMP IS AVAILABLE.
   C. SELECT AN INNER FERRULE PART NUMBER TO MATCH THE CABLE CLAMP SIZE AND CABLE DIAMETER TO BE USED.
   D. USE THE OUTER FERRULE LISTED WITH THE CHOSEN INNER FERRULE.
   E. SEE SPLIT RING FERRULES ON DRAWING 745508 FOR ADDITIONAL OPTIONS.
4. 2.54µm [.000100] MIN TIN, OVER 2.54µm [.000100] MIN COPPER.
5. OBSOLETE
6. D DIMENSION APPLIES TO STYLE II OR STYLE III FERRULES ONLY.
7. OBSOLETE PARTS: OBSOLETE CIS STREAMLINING PER D.RENAUD/D.SINISI

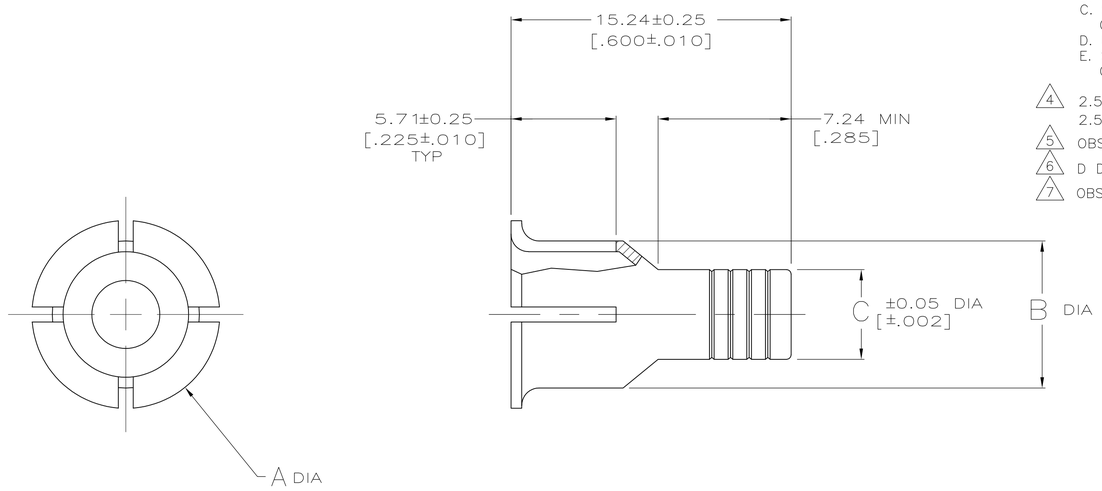

STYLE I

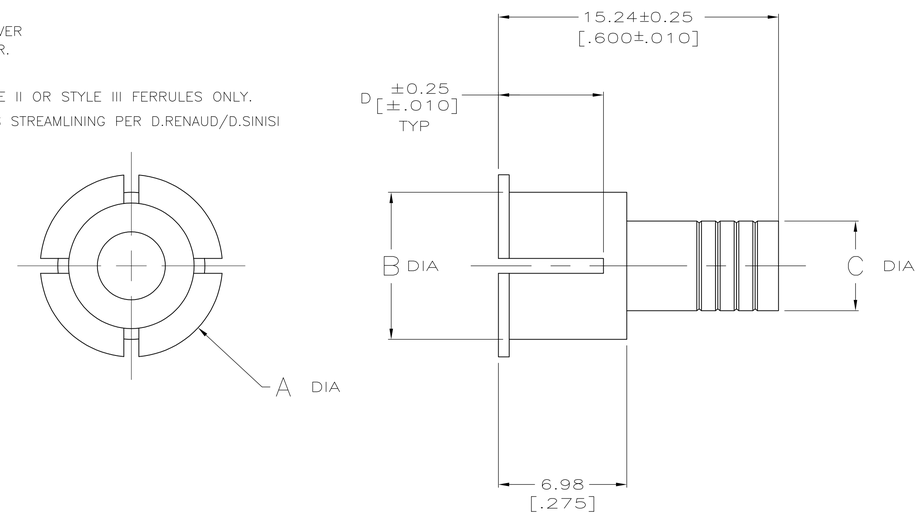

STYLE II

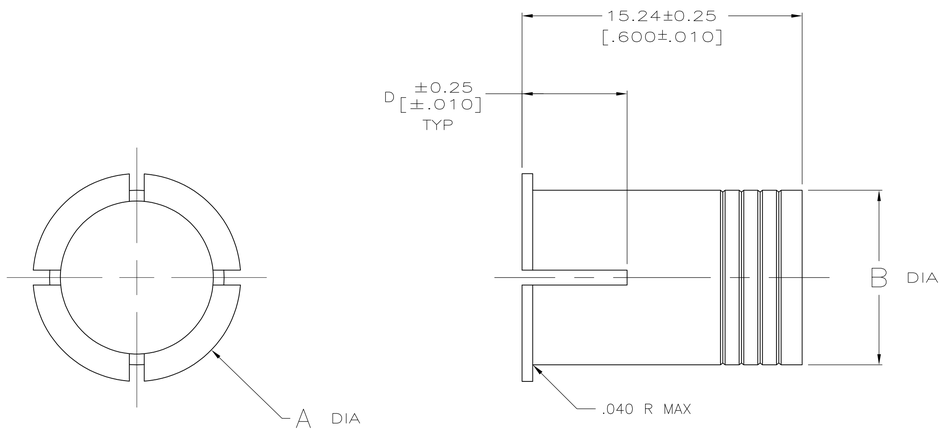

STYLE III

OUTER FERRULE P/N	FINISH	FOR CABLE CLAMP SIZE(S)	CABLE DIA RANGE	STYLE	D		C		B		A		PART NUMBER
4-745130-5	4	1, 2, 5	.230-.280	I OR II	5.72	(0.225)	5.72	(0.225)	8.00	(0.315)	10.16	(0.400)	7-745129-9
4-745130-5		2, 3, 4	.230-.280	I OR II	4.70	(0.185)	5.72	(0.225)	9.50	(0.374)	11.56	(0.455)	7-745129-8
4-745130-3		5	.600-.650	I OR II	5.72	(0.225)	15.11	(0.595)	17.65	(0.695)	19.94	(0.785)	5 7-745129-7
4-745130-2		4	.480-.530	I OR II	5.72	(0.225)	11.94	(0.470)	15.11	(0.595)	17.40	(0.685)	7-745129-6
4-745130-1		3, 5	.380-.430	I OR II	5.72	(0.225)	9.50	(0.374)	11.94	(0.470)	14.22	(0.560)	7-745129-5
4-745130-2		3, 5	.480-.530	III	5.72	(0.225)	---		11.94	(0.470)	14.22	(0.560)	7-745129-4
7 OBSOLETE 3-745130-8		2, 3, 4	.190-.240	I OR II	5.72	(0.225)	4.88	(0.192)	9.50	(0.374)	11.56	(0.455)	7-745129-3
3-745130-9		2, 3, 4	.300-.350	I OR II	5.72	(0.225)	7.47	(0.294)	9.50	(0.374)	11.56	(0.455)	7-745129-2
4-745130-1		2, 3, 4	.380-.430	III	5.72	(0.225)	---		9.50	(0.374)	11.56	(0.455)	7-745129-1
3-745130-8		1, 2, 5	.190-.240	I OR II	5.72	(0.225)	4.88	(0.192)	8.00	(0.315)	10.16	(0.400)	7-745129-0
4-745130-0	4	1, 2, 5	.320-.370	III	5.72	(0.225)	—		8.00	(0.315)	10.16	(0.400)	6-745129-9
1-745130-6	2	1, 2, 5	.230-.280	I OR II	5.72	(0.225)	5.72	(0.225)	8.00	(0.315)	10.16	(0.400)	5 3-745129-4
1-745130-6		2, 3, 4	.230-.280	I OR II	5.72	(0.225)	5.72	(0.225)	9.50	(0.374)	11.56	(0.455)	5 3-745129-2
1-745130-2		5	.480-.530	I OR II	5.72	(0.225)	11.94	(0.470)	17.65	(0.695)	19.94	(0.785)	5 3-745129-0
1-745130-3		5	.600-.650	I OR II	5.72	(0.225)	15.11	(0.595)	17.65	(0.695)	19.94	(0.785)	2-745129-9
1-745130-4		5	.700-.750	III	5.72	(0.225)	—		17.65	(0.695)	19.94	(0.785)	5 2-745129-8
1-745130-1		4	.380-.430	I OR II	5.72	(0.225)	9.50	(0.374)	15.11	(0.595)	17.40	(0.685)	5 2-745129-7
1-745130-2		4	.480-.530	I OR II	5.72	(0.225)	11.94	(0.470)	15.11	(0.595)	17.40	(0.685)	5 2-745129-6
1-745130-3		4	.600-.650	III	5.72	(0.225)	—		15.11	(0.595)	17.40	(0.685)	5 2-745129-5
745130-9		3, 5	.300-.350	I OR II	5.72	(0.225)	7.47	(0.294)	11.94	(0.470)	14.22	(0.560)	5 2-745129-4
1-745130-1		3, 5	.380-.430	I OR II	5.72	(0.225)	9.50	(0.374)	11.94	(0.470)	14.22	(0.560)	5 2-745129-3
1-745130-2		3, 5	.480-.530	III	5.72	(0.225)	---		11.94	(0.470)	14.22	(0.560)	5 2-745129-2
745130-8		2, 3, 4	.190-.240	I OR II	5.72	(0.225)	4.88	(0.192)	9.50	(0.374)	11.56	(0.455)	5 2-745129-1
745130-9		2, 3, 4	.300-.350	I OR II	5.72	(0.225)	7.47	(0.294)	9.50	(0.374)	11.56	(0.455)	5 2-745129-0
1-745130-1		2, 3, 4	.380-.430	III	5.72	(0.225)	---		9.50	(0.374)	11.56	(0.455)	5 1-745129-9
745130-8		1, 2, 5	.190-.240	I OR II	5.72	(0.225)	4.88	(0.192)	8.00	(0.315)	10.16	(0.400)	5 1-745129-8
1-745130-0		1, 2, 5	.320-.370	III	5.72	(0.225)	—		8.00	(0.315)	10.16	(0.400)	5 1-745129-7
745130-8	2	1	.190-.240	III	5.72	(0.225)	—		4.88	(0.192)	6.99	(0.275)	5 1-745129-6

THIS DRAWING IS A CONTROLLED DOCUMENT.

DIMENSIONS: mm [INCHES]

TOLERANCES UNLESS OTHERWISE SPECIFIED:
0 PLC ± –
1 PLC ± –
2 PLC ± 0.13 [.005]
3 PLC ± –
4 PLC ± –
ANGLES ± –

MATERIAL 1

FINISH SEE TABLE

DWN D.BROCKWAY 20MAY04
CHK C. ROHDE 20MAY04
APVD M. WALMSLEY 20MAY04

PRODUCT SPEC —
APPLICATION SPEC —
WEIGHT —

TE Connectivity

NAME FERRULE, INNER, AMPLIMITE HDP-20

SIZE	CAGE CODE	DRAWING NO	RESTRICTED TO
A1	00779	C-745129	—

CUSTOMER DRAWING | SCALE 4:1 | SHEET 1 OF 1 | REV L2

4805 (3/11)